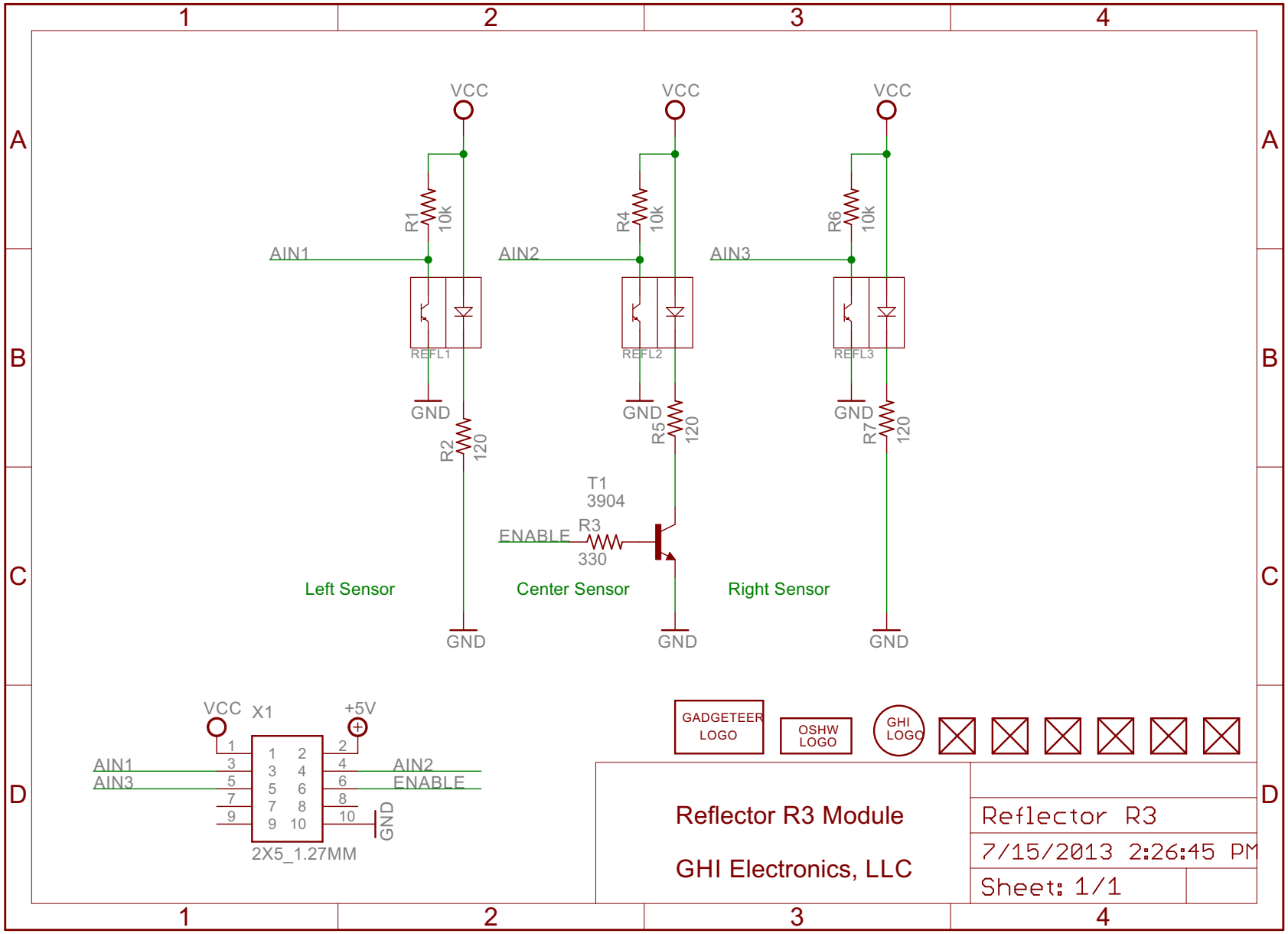
VCC
R1
10k
AIN1
REFL1
GND
R2
120
GND
VCC
R4
10k
AIN2
REFL2
GND
R5
120
T1
3904
ENABLE
R3
330
GND
VCC
R6
10k
AIN3
REFL3
GND
R7
120
GND
Left Sensor
Center Sensor
Right Sensor
VCC
X1
+5V
AIN1
AIN3
AIN2
ENABLE
GND
2X5_1.27MM
GADGETEER LOGO
OSHW LOGO
GHI LOGO
Reflector R3 Module
GHI Electronics, LLC
Reflector R3
7/15/2013 2:26:45 PM
Sheet: 1/1